INSTALLATION INSTRUCTIONS

EM-M11014 & EM-M11018
NMO MOUNT ANTENNA

Congratulations on your selection of another quality antenna product from E/M Wave.
E/M Wave is committed to continually provide the greatest antenna VALUE for your wireless applications.

1. Parts: Verify all parts are included with the antenna as shown in Fig. 1.
A. Antenna Assembly B. O-ring

2. Pre-Installation (Fig. 2):
A. The antennas are designed for installation to a high quality, low loss NMO mount (sold separately, see Figure 2).
B. For best performance, the metallic ground-plane installation surface should be approximately 14" (355mm) diameter or greater. See Figure 3.
C. Verify that the surface immediately surrounding the NMO mount is flat, properly cleaned and clear of obstructions.

3. Installation:
A. Press O-ring around the base of the NMO antenna mount as shown in Figure 2.
B. Thread antenna assembly onto NMO mount with firm hand torque until O-ring is completely seated against mounting surface. **Important:** Also verify Antenna Radiator Section is attached with firm hand torque. **CAR WASH REMOVAL (Fig. 1): Note:** Leave the Base Adapter attached to the NMO mount to protect the mount from water and debris. Using one hand, hold the base adapter with a firm grip. Using the opposite hand, detach the Antenna Radiator Section **only** by unthreading with a Counter Clockwise (CCW) rotation from the base adapter.

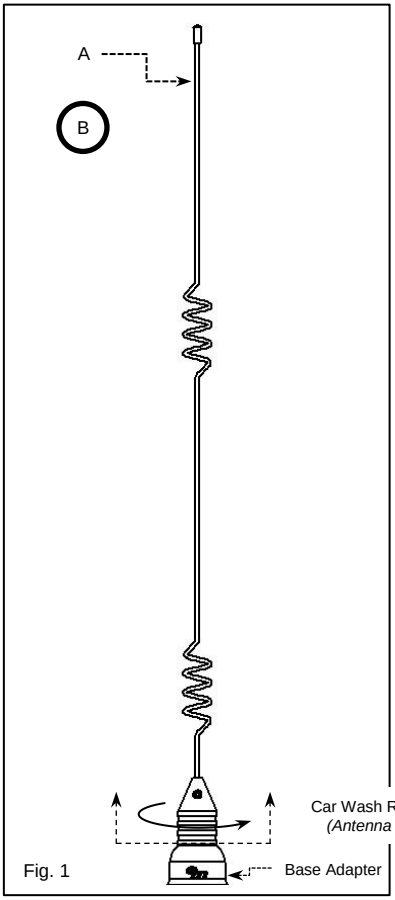

Fig. 1

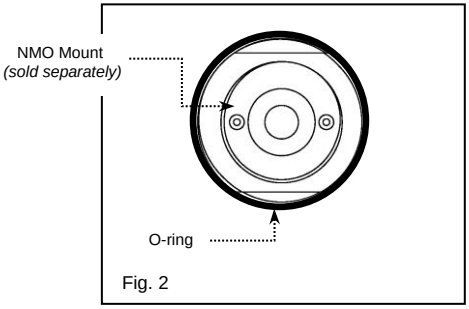

Fig. 2

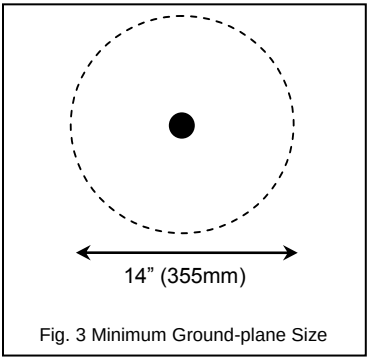

Fig. 3 Minimum Ground-plane Size

For Product and Warranty Information
www.emwaveinc.com