INSTALLATION INSTRUCTIONS

EMBKT-BSA800

BASE STATION, GROUND PLANE KIT

NMO to N TYPE, 800/900 MHz

Congratulations on your selection of another quality antenna product from E/M Wave.
E/M Wave is committed to continually provide the greatest antenna VALUE for your wireless applications.

1. Parts: Verify all parts are included as shown in Fig. 1.

A. Antenna Adapter NMO to N Type (1 ea.) with Ground Plane Rod (4 ea.).

B. Mounting SAE No. 32 Worm-Drive Clamp (2 ea.), L-Bracket 16mm Hole (1 ea.).

C. Hex Wrench, 1.5mm.

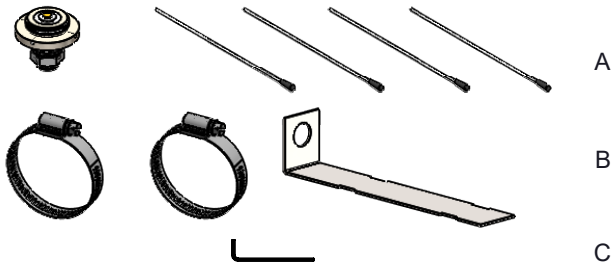

Fig. 1

2. Installation: Warning! Installation of this product near powerlines is dangerous. For your safety, follow the enclosed installation directions.

A. Before installation, verify Antenna Frequency. Trim each Ground Plane Rod per table below.

Frequency Band	Overall Length, Ground Plane Rods (4 ea,)
800 MHz	Full Length as Supplied. No Trimming Required.
900 MHz	3-3/4" (95mm)

B. Identify suitable support mast pipe size, 1-9/16" to 2-1/2" dia. max.

C. Insert Ground Plane Rods into Antenna Adapter. Secure rods using Hex Wrench to lock set screws located on the bottom side of adapter.

D. Attach Antenna Adapter, L-Bracket, and Mounting Clamps onto support mast pipe as shown in Fig. 2.
(Fig. 2 shows the reference line. Mast pipe is to be installed below this line.)

E. Attach coaxial transmission line, terminated with N male connector, to the N Jack Adapter. Apply the required environmental seal to the N connector coupling.

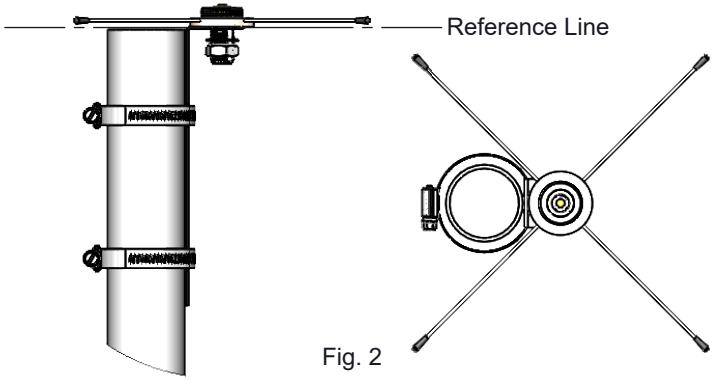

Fig. 2

For Product and Warranty Information
www.emwaveinc.com