WHIP CUTTING INSTRUCTIONS FOR TUNING NO SPRING (LS) MODELS

Cut the whip to the Tuned Length "W" in the column corresponding to the proper model, for the desired center frequency.
Both metric and imperial measurements listed for convenience.
IMPORTANT: Before Cutting.
It is recommended to cut whip longer than the required dimension to verify actual performance.
Then trim the whip in 1.5mm (1/16”) increments to fine tune the desired VSWR response.
CUTTING NOTE: The whip can be cut using a grinding wheel or shearing tool designed for this purpose.
The Tuned Length “W” is determined by measuring the distance between the top of the whip adapter and the top of the whip.
Cut length dimension will be approximately 34mm (1 3/8") longer than Tuned Length “W”.

"W" VALUES BY MODEL

Frequency (MHz)	EM-M10001-LS	
	mm	In.
108	657	25 7/8
110	642	25 5/16
115	608	23 15/16
120	577	22 11/16
125	548	21 9/16
130	522	20 9/16
135	498	19 5/8
140	477	18 3/4
145	456	17 15/16
150	438	17 1/4
155	420	16 9/16
160	404	15 7/8
165	389	15 5/16
170	375	14 3/4
175	362	14 1/4
180	349	13 3/4
185	338	13 5/16
190	327	12 7/8
195	316	12 7/16
200	307	12 1/16
205	297	11 11/16
210	289	11 3/8
215	280	11 1/16
220	272	10 3/4
225	265	10 7/16
380	140	5 1/2
385	138	5 7/16
390	136	5 5/16
395	133	5 1/4
400	131	5 1/8
405	128	5 1/16
410	126	4 15/16
415	123	4 7/8
420	121	4 3/4
425	119	4 11/16
430	117	4 9/16
435	115	4 1/2
440	113	4 7/16
445	111	4 3/8
450	109	4 5/16
455	108	4 1/4
460	106	4 3/16
465	105	4 1/8
470	104	4 1/8
475	103	4 1/16
480	102	4
485	101	4
490	100	3 15/16
495	100	3 15/16
500	99	3 7/8
505	98	3 13/16
510	96	3 13/16
515	95	3 3/4
520	93	3 11/16

Frequency (MHz)	EM-M10004-GPI-LS WITH GROUND PLANE		EM-M10004-GPI-LS NO GROUND PLANE		EM-M10004-LS	
	mm	In.	mm	In.	mm	In.
132	1120	44 1/8	1318	51 7/8	1318	51 7/8
135	1094	43 1/16	1256	49 7/16	1305	51 3/8
138	1068	42 1/16	1202	47 5/16	1276	50 1/4
141	1043	41 1/16	1153	45 7/16	1238	48 3/4
144	1018	40 1/16	1110	43 11/16	1197	47 1/8
147	993	39 1/8	1072	42 3/16	1156	45 1/2
150	969	38 1/8	1037	40 13/16	1118	44
153	945	37 3/16	1006	39 9/16	1084	42 11/16
156	921	36 1/4	977	38 7/16	1052	41 7/16
159	898	35 3/8	950	37 7/16	1023	40 1/4
162	875	34 7/16	925	36 3/8	995	39 1/8
165	852	33 9/16	900	35 7/16	966	38 1/16
168	830	32 11/16	875	34 7/16	937	36 7/8
171	808	31 13/16	849	33 7/16	905	35 5/8
174	787	31	822	32 3/8	872	34 5/16

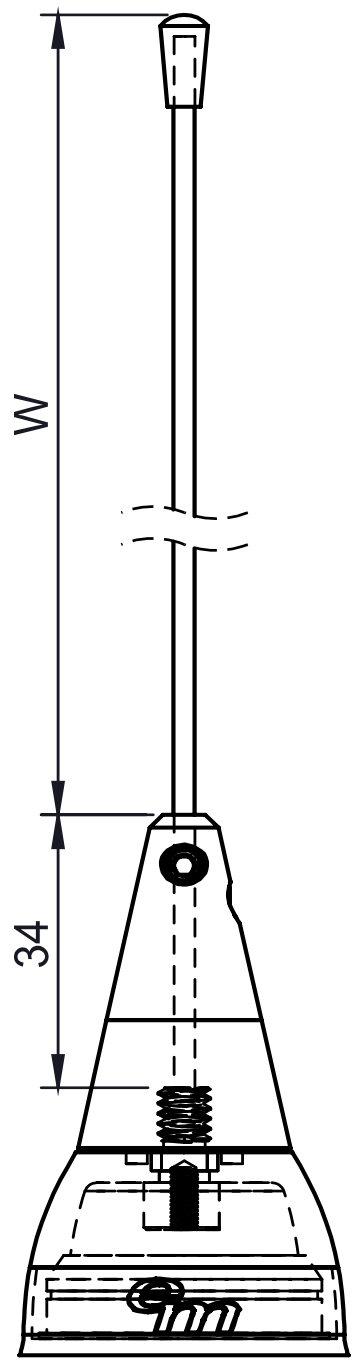

Frequency (MHz)	EM-M10003-LS		EM-M10013-LS	
	mm	In.	mm	In.
420	347	13 11/16	-	-
425	341	13 7/16	-	-
430	333	13 1/8	-	-
435	325	12 3/4	-	-
440	316	12 7/16	-	-
445	307	12 1/16	-	-
450	299	11 13/16	-	-
455	292	11 1/2	-	-
460	285	11 1/4	-	-
465	278	10 15/16	-	-
470	270	10 5/8	284	11 3/16
475	-	-	272	10 3/4
480	-	-	266	10 7/16
485	-	-	262	10 5/16
490	-	-	258	10 3/16
495	-	-	254	10
500	-	-	249	9 13/16
505	-	-	242	9 9/16
510	-	-	236	9 1/4
515	-	-	230	9 1/16
520	-	-	229	9

Frequency Band (MHz)	EM-M10003-GPI-LS WITH GROUND PLANE		EM-M10003-GPI-LS NO GROUND PLANE	
	mm	In.	mm	In.
381 - 430	178	7	195	7 11/16
401 - 450	167	6 9/16	172	6 3/4
441 - 490	140	5 1/2	148	5 13/16
471 - 520	105	4 1/8	135	5 5/16

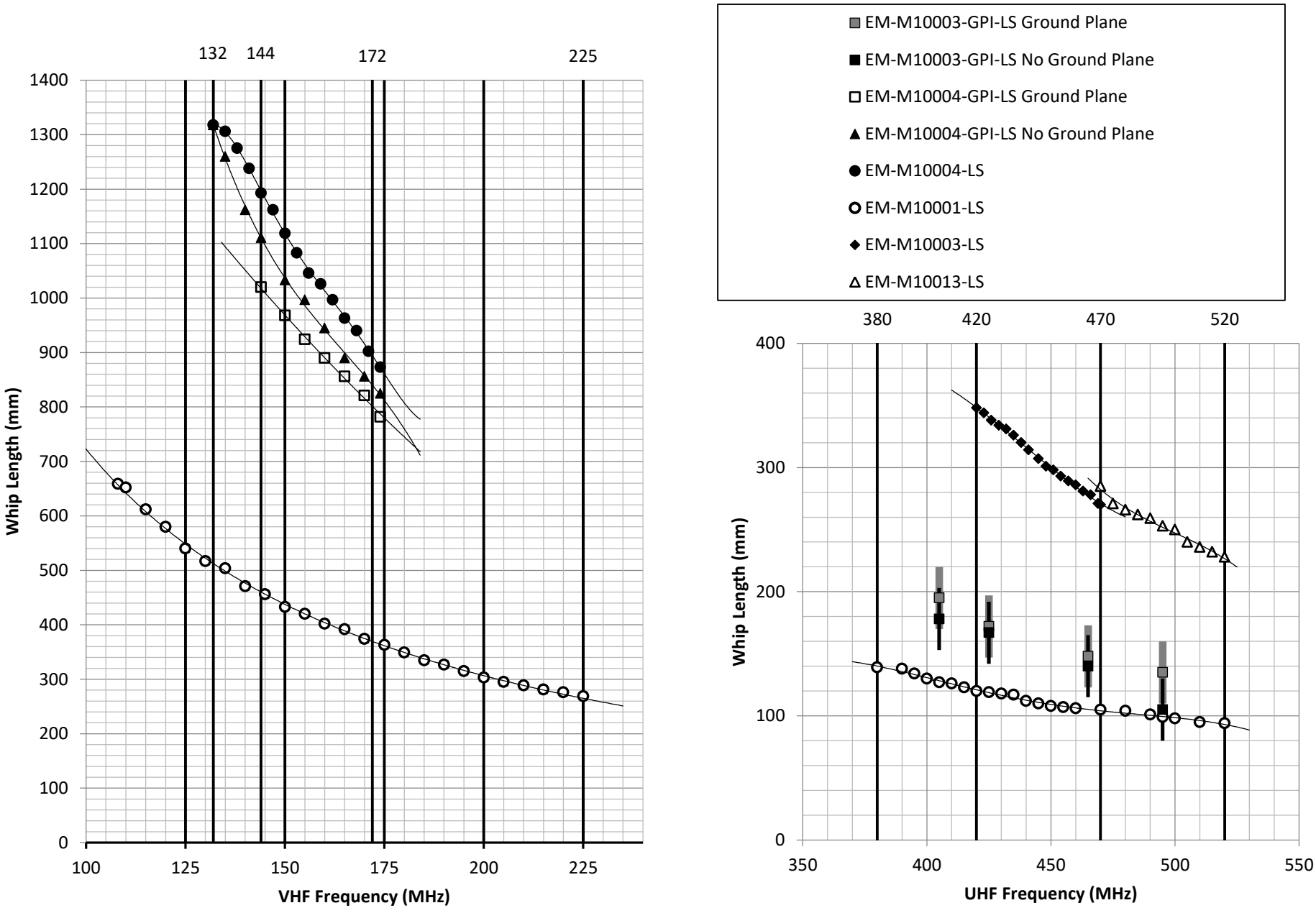
EM-M10003-GPI-LS Ground Plane
EM-M10003-GPI-LS No Ground Plane
EM-M10004-GPI-LS Ground Plane
EM-M10004-GPI-LS No Ground Plane
EM-M10004-LS
EM-M10001-LS
EM-M10003-LS
EM-M10013-LS
132
144
172
225
380
420
470
520
Whip Length (mm)
VHF Frequency (MHz)
UHF Frequency (MHz)