INSTALLATION INSTRUCTIONS
EM-M11017 (698-896 MHz)
POLY PRO LOW PROFILE BROADBAND NMO MOUNT ANTENNA

Congratulations on your selection of another quality antenna product from E/M Wave.
E/M Wave is committed to continually provide the greatest antenna VALUE for your wireless applications.

1. Parts: Verify all parts are included with the antenna as shown in Fig. 1.

A. Antenna
B. O-ring

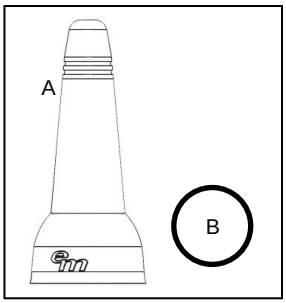

Fig. 1

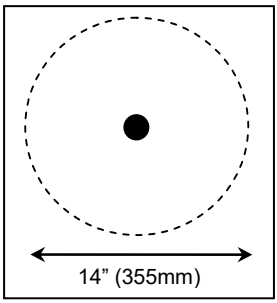

Fig. 2

2. Pre-Installation (Fig. 2):

A. The EM-M11017 antenna is designed for installation to a high quality, low loss NMO mount (sold separately, see Fig. 3).
B. For best performance, the metallic ground-plane installation surface should be approximately 14” (355mm) diameter or greater.
C. Verify that the surface immediately surrounding the NMO mount is flat, properly cleaned and clear of obstructions.

3. Installation:

A. Press O-ring around the base of the NMO antenna mount as shown in Figure 3.
B. Thread antenna onto NMO mount. Tighten with firm hand torque until O-ring is completely seated against mounting surface.
C. **CAR WASH REMOVAL (Fig. 4):** Using one hand, hold the antenna at the base adapter with a firm grip. Using the opposite hand, detach the upper radiator section **only** by unthreading with a Counter Clockwise (CCW) rotation from the base adapter. **Note:** Leave the NMO Base Adapter attached to the NMO mount to protect the mount from water and debris.

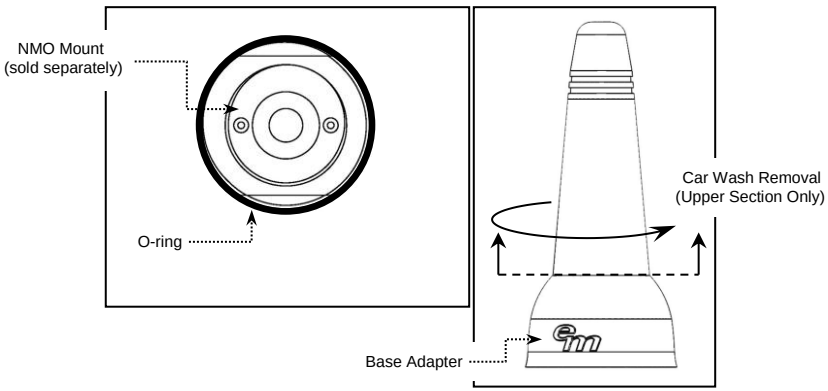

Fig. 4