ASSEMBLY & INSTALLATION INSTRUCTIONS

EMBKT-BFG05

Congratulations on your selection of another quality antenna product from E/M Wave.
E/M Wave is committed to continually provide the greatest antenna VALUE for your wireless applications.

NOTE: Mounting Kit contains 2 sets of the parts listed and shown below:

1. Parts: Verify all parts are included with the Antenna as shown in Figure 1.

1. U-Bolt, ¼"-20 (1 ea.)
2. Mounting Clamp (3 ea.)
3. Flat Washer (6 ea.)
4. Lock Washer (6 ea.)
5. Hex Nut, ¼-20 (6 ea.)

2. Assembly:

- Assemble each U-Bolt/Bracket Mount per Figure 1.
- Adjust the position of the brackets to accommodate both the mast and the antenna to be installed. The brackets will accommodate a maximum pipe mast diameter of 2.0 inches (50.8mm).
- Mount Antenna (sold separately) per Manufacturer's recommended instructions using 2 ea. U-Bolt/Bracket sets as shown in Figure 1.

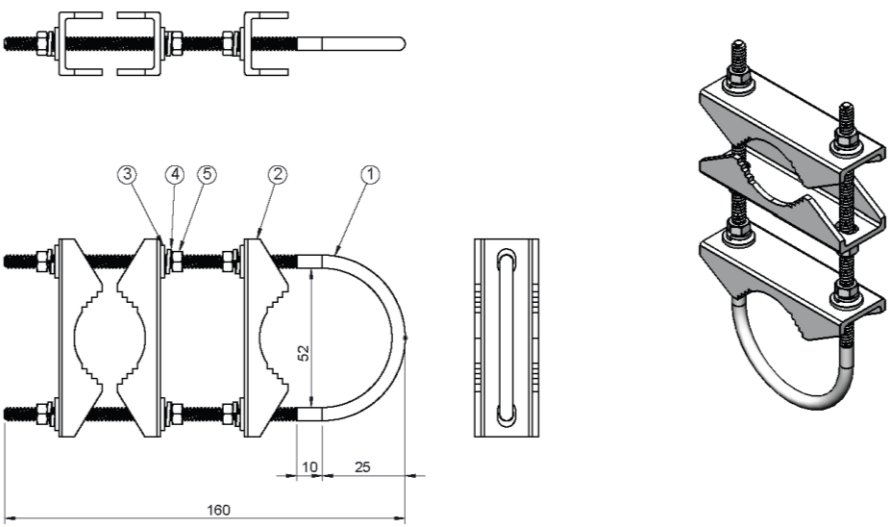

Figure 1